Specification sheet of CLOCK MOVEMENT (17-0003)

Step Movement (Fitting method:Center Screw)

Aug-2017
SEIKO CLOCK INC.

Scale 1:2

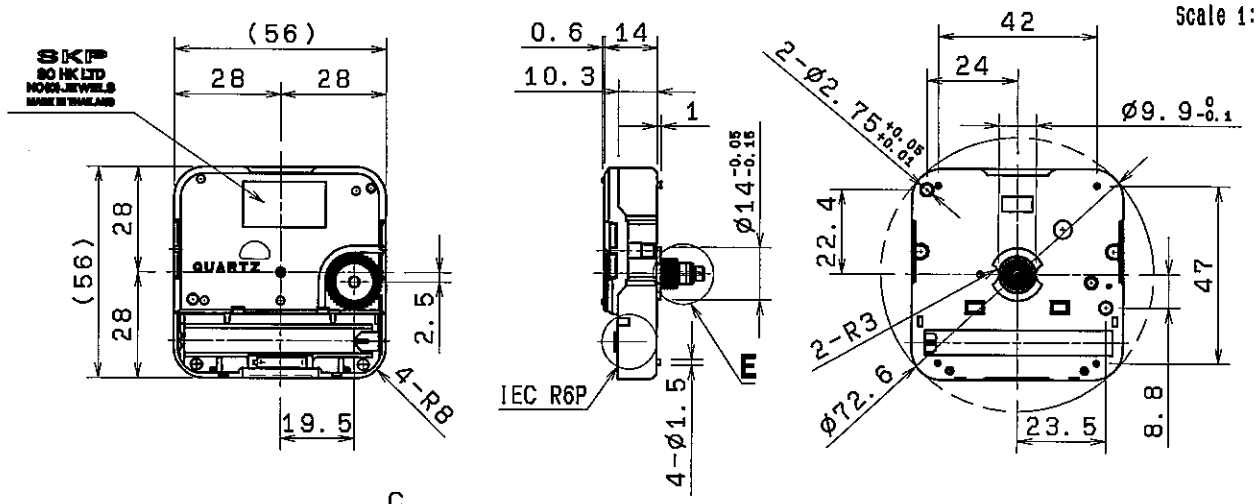

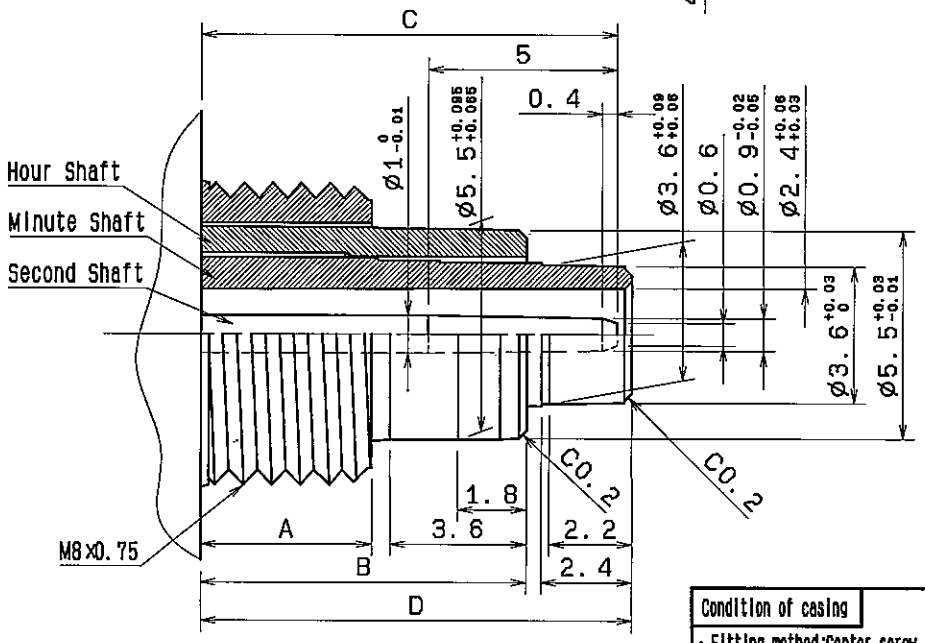

Detail of E (5:1)

Made in SEIKO Factory (Thailand)

CAL.	A:Center Screw	B:Hour Hand	C:Seconds Hand	D:Minute Hand
28009V	4.5	8.6	11	11.4
28009L (※1)	4.5	8.6	11	11.4
42800V	4.5	10.4	12.5	13.2
42800L (※1)	4.5	10.4	12.5	13.2
42902V	8.8	12.6	15.4	15.4
28803V	8.8	15.2	15.5	18
46806V	12.5	15.2	17.5	18.1
28804V	19	22.5	25.8	25.3

(※1) There is no carving made in Thailand.

Indication	Hour, Minute and Seconds hand (step second)
Starting method	Self starting
Original governor	Crystal oscillator 32.768kHz
Accuracy of time	Average monthly rate : Within ±20sec.
Operating temperrature	(-10~+50)℃
Operating voltage	(1.3~1.7)V
Average current	Less than 130μA/1.5V 23±3℃
Output torque	Seconds hand:More than 0.55x10⁻²N·m(0.55gf·cm)/1.3V Minute Hand :More than 2.7x10⁻²N·m(27gf·cm)/1.3V
Battery	(JIS IEC R6P) (SUM-3) 1.5V
Battery life	About 1 year

Condition of casing

- Fitting method:Center screw
- The torque to fasten is less than to 1N·m(10 Kgf·cm)
- Pressure for hands press fitting : Less than 50N (5 Kgf)
  [Caution] Support center of UPPER PLATE when fitting hands.
- Metal hands is as follows.
  ※If you use plastic hands , please make dimensions smaller than below.

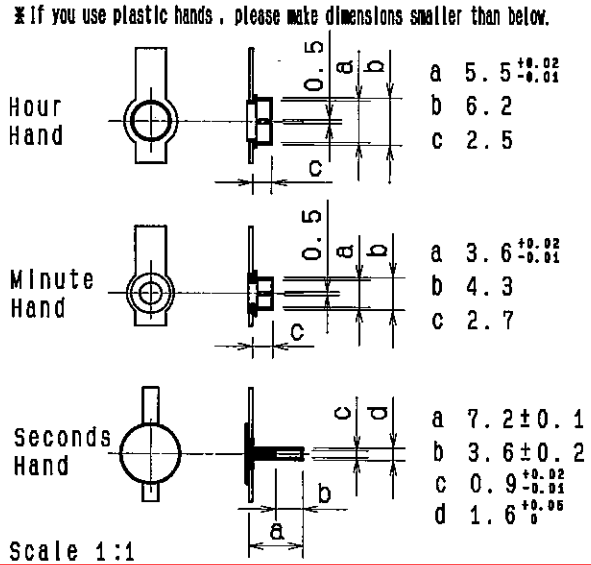

Scale 1:1

Condition / Hands	Unbalance N·m (gf·cm)	Weight (g)	Length from center (mm)
Seconds hand	Less than 1.5x10⁻²(0.15)	Less than 2	Less than 130
Minute Hand	Less than 6x10⁻²(6)	Less than 5	Less than 160
Hour hand	Less than 6x10⁻²(6)	Less than 5	Less than 160

The above product specifications are subject to change without priornotice for improvement.

3RD ANGLE PROJECTION
UNIT:mm